Braytron

PRODUCT DATASHEET

MODEL NO	**BA13-01323**
DESCRIPTION	**BRY-ADVANCE-13W-E27-A65-6500K-LED BULB**

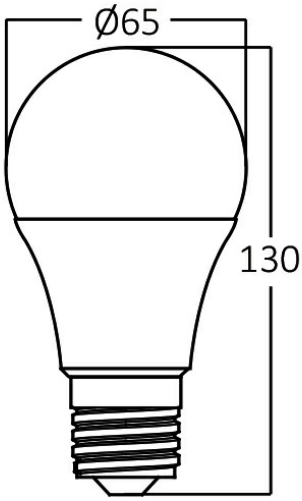

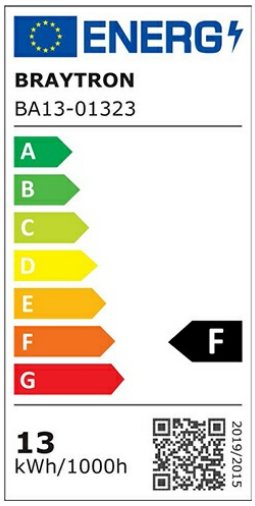

BRAYTRON SRL
Bulaverdul iuliu maniu, Nr.616, Sector 6, 061129, Bucuresti-ROMANIA
info@braytron.com
www.braytron.com

General Characteristics

Model No	:	BA13-01323
Main Family	:	Bulbs & Tubes
Sub Family	:	A Shape Bulbs
Type	:	A60
Lamp Shape	:	Non-Directional
Dimmable	:	Not-Dimmable
Light Source	:	LED
Socket	:	E27
Warranty	:	2 years
Class	:	Class II
IP	:	IP20

Lamp Characteristics

Wattage	:	13 w
Color Temperature	:	6500K
Quse Lumen	:	1350 lm
Color Rendering Index (CRI)	:	>80
Energy Efficiency Level	:	F
Beam Angle	:	180° Degrees
Equivalent	:	90 w
Color Category	:	Cool White

Electrical Characteristics

Lifetime (at 2.7 h/day)	:	15000 h
Voltage	:	220-240V
Power Factor	:	>0,5
Material	:	PBT
Working Temperature	:	-20 C-40 C
Frequency	:	50-60 Hz

Lamp Dimensions & Weight

Diameter	:	60 mm
P. Height	:	117 mm
Weight	:	42 gr

Package Informations

N.W.	:	4,2 kgs
G.W.	:	7,7 kgs
PCS/CTN	:	100 pcs
Length	:	685 mm
Width	:	355 mm
Height	:	295 mm
EAN	:	5949097723537